Hunter®

PRODUCT INFORMATION

PGP® Rotor

The World's Best-Selling Rotor for Residential and Light Commercial Applications

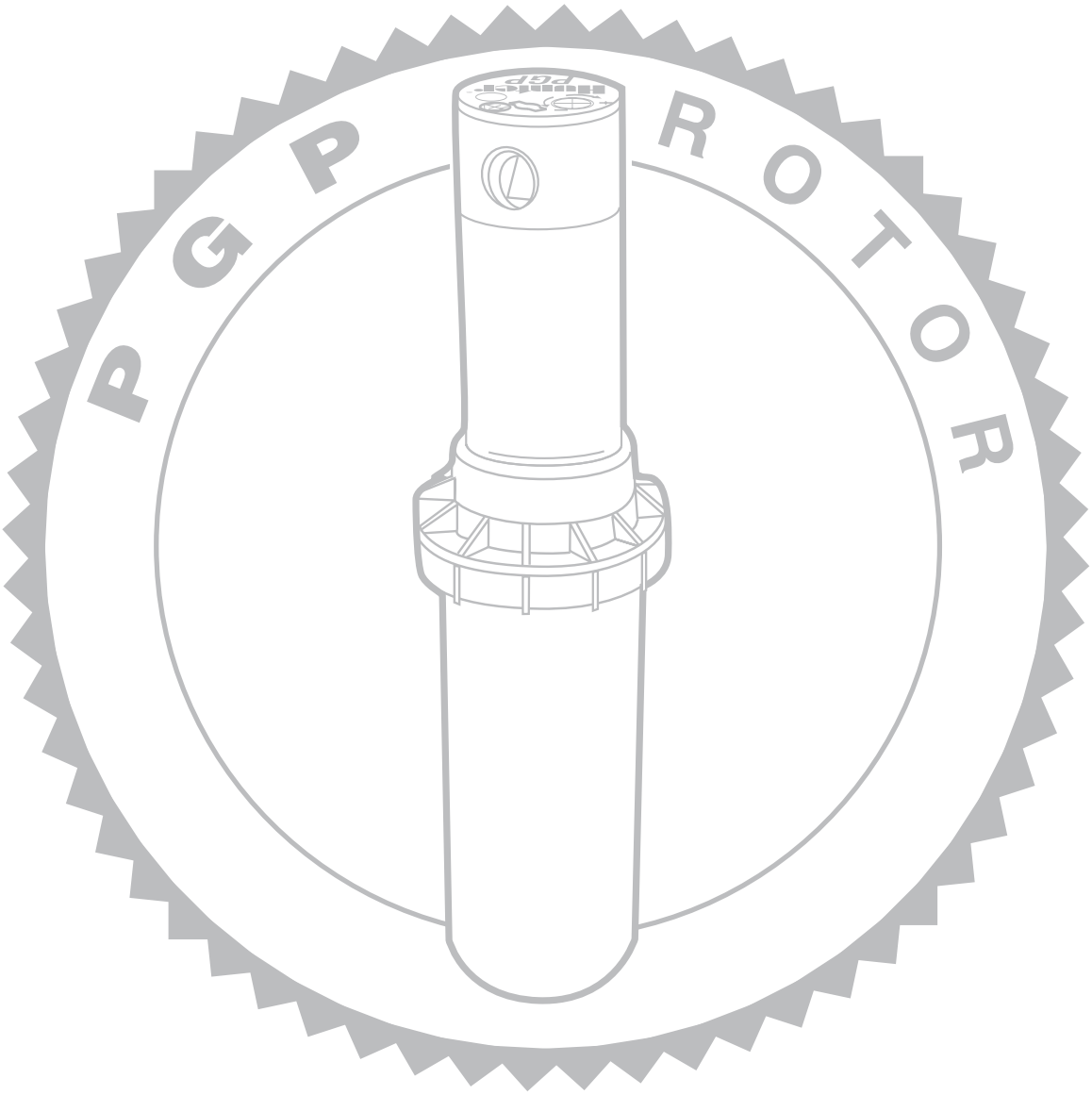

TABLE OF CONTENTS

Product Overview 1
Product Features and Benefits 2
Product Comparisons 6
Nozzle Replacement Guide 7
Technical Information 8
Product Performance 8
Installation Details 10
Installation and Maintenance 11
PGS Replacement Parts 14
PGP Replacement Parts 15
PGH Replacement Parts 16
Precipitation Rate and Sprinkler Run Time Formulas 17

PRODUCT OVERVIEW

In the 1950's, Edwin J. Hunter became the first to design and patent plastic gear driven sprinklers. His revolutionary concept was applied to many sprinkler designs over the next 30 years, but it was not until the 1981 introduction of the PGP® rotor that the full breadth of his experience and expertise was so expertly crafted into a single product.

Its exceptional design and impressive performance placed the rotor a cut above back then, while continuous improvements and enhancements have allowed it to maintain its stance as the number one selling rotor in the world ever since.

Today the PGP rotor family continues to set standards for the landscape irrigation industry, as no other rotor can match its outstanding track record for customer acceptance.

With superior water distribution from precision-engineered nozzles, PGP is simply unequaled for reliability, durability, or versatility. It's also unequaled in value – no sprinkler in its class comes close for cost-efficiency.

An Easy Choice for Installers

Irrigation installers prefer the PGP rotor for four simple reasons: it's easy to install, it's easy to adjust, it's guaranteed reliable, and it's the best value money can buy.

Installation is easy because of its compact design and wide selection of nozzles (27 to choose from) – no other rotor makes it so simple to custom tailor radius and application rate to the needs of the landscape. A unique "through the top" adjustment mechanism allows modifications to be made quickly and precisely whether the sprinkler is on or off, while the rubber cover protects the adjustment sockets from the intrusion of debris. The industry's #1 continuously-improved gear-drive system, coupled with the 3-spring reversing technology, guarantees reliable operation and optimum performance.

There's no better value on the market than the Hunter PGP. And, with its patented features and Hunter's years of experience in gear-drive technology, it's no wonder the PGP rotor remains the professional's choice.

Different Applications, Different Models

The patriarch of the PGP family is the standard lawn pop-up model, which efficiently irrigates turf with a full 4" pop-up. But, other family members include the unique high pop-up model (PGH) that rises a full 12" to water planting beds and groundcover areas without the need for riser standpipes, and a fixed shrub model (PGS) specifically designed for use in sloped areas and other special applications.

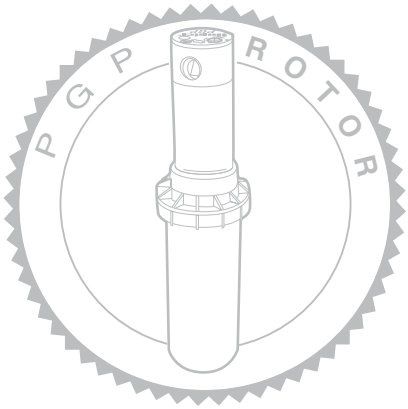

PRODUCT FEATURES AND BENEFITS

Enhanced Nozzle Efficiency
Performance by design

With a combination of intelligent planning, carefully controlled manufacturing and frequent testing that conforms to the strictest industry standards, the exceptional performance of our remarkable nozzles is no accident. Hunter is the only rotary sprinkler manufacturer that not only tests nozzles during the development stage but also performs frequent tests of every batch produced. Hunter takes the extra step to check our work by asking the Center for Irrigation Technology in Fresno, California to independently test our nozzles to provide third party verification of their superior results.

Superior Coverage – Across the Range
20 standard and 7 low angle nozzles

With every sprinkler in the PGP rotor group, 12 red standard nozzles (25° trajectory) are included on one rack—FREE! Totally interchangeable, these nozzles provide the ultimate in versatility for any application. For an even more visually appealing watering pattern, a rack of 8 blue standard nozzles (also 25° trajectory) is available as an option. The blue nozzles feature a simplified I.D. system with each nozzle marked with an easy-to-read number that equals the flow rate. If wind, slopes, low hanging branches, or the need to water a smaller area are a concern, request PGP low angle nozzles (13° trajectory) from your distributor for exceptional performance in these tough conditions. All PGP nozzles provide uniform coverage close to the sprinkler as well as throughout the full distance of throw—with no wet or dry spots in all head-to-head spacing installations from 20 to 50 feet. Plus, because the nozzles are readily interchanged and adjusted, the installer can easily fine tune watering to meet field conditions.

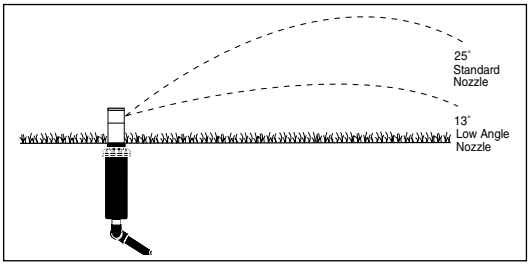

40˚ to 360˚ Adjustable Arc or Full Circle Versions
For fastest, hassle-free adjustment, wet or dry, up or down

The PGP Adjustable Arc Rotor is the all-in-one sprinkler because of its reversing full circle and part-circle operation in one unit. With its 40˚ to 360˚ Adjustable Arc, most odd shaped areas can be irrigated with a quick turn of the Hunter wrench. The PGP can be adjusted up or down, wet or dry, for maximum convenience. Only one rotor is needed to cover those curving shrub beds and odd-angled hardscapes.

Factory Installed Nozzles
Convenience for large projects

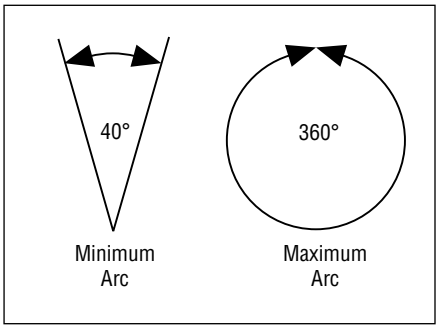

Hunter is always looking for ways to help the installer be more cost effective. The PGP can be ordered with factory installed red standard nozzles to reduce the amount of time needed to install sprinklers. This convenience on large projects translates to a lot of time potentially saved on the job.

Blank Nozzle
Quick and easy shut down of individual rotors

A blank nozzle is provided on the rack of low angle nozzles for those times when the installer or end-user has a need to shut off the water flow through the nozzle. Easily installed as with all PGP® nozzles, this blank nozzle eliminates the requirement of removing the rotor from the system and capping off the elbow or riser. The perfect example of this would be where a complete system is installed but the project will be landscaped in phases, with no need to irrigate the non-landscaped sections. Another use for the blank nozzle is where sections of turf or planter areas are under renovation and no irrigation will be required in those areas during the renovation. The blank nozzle is just one more feature that sets the Hunter PGP rotor apart from the competition.

Quick Check™ Arc/Fast Forward
Quick verification of arc stop points

The PGP allows the user to check the right and left arc stops without affecting the original settings. The ability to manually move the arc in a fast forward manner allows the installer to set the sprinkler arc more rapidly. While this "quick check" is most accurate with water flowing, checking while dry will also give a very good idea of the arc setting. With the riser in the extended position, turn the top of the riser back and forth with just one's fingers. Where the arc stops will be very close to the same point as when the rotor is operating under water pressure.

Three Rotor Models...
Turf, shrubs, or slopes

The PGP rotors come in three handy models, ready to meet the different watering needs in any landscape. When higher plant material is an issue, the PGH 12" (30 cm) pop-up offers uninterrupted spray while still irrigating the shrubs. And because it fully retracts to ground level, it's ideal for both high-traffic and high-visibility areas. With cool or warm season grasses, the PGP 4" (10 cm) pop-up is the rotor of choice. It pops up and waters efficiently and quietly. If large shrub beds or slopes are being watered, the PGS shrub can be mounted on a riser of appropriate height.

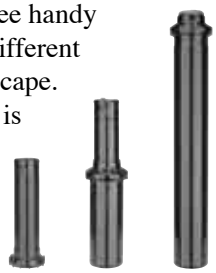

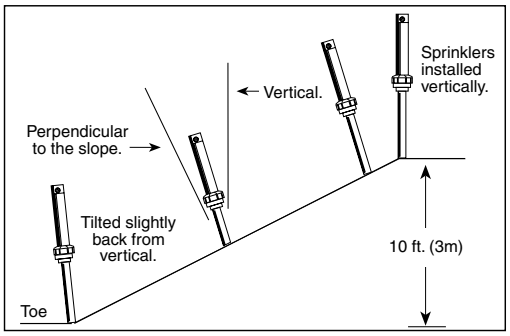

Typical slope installation using PGS shrub sprinklers.

Proven, Long-Life Water Lubricated Gear Drive
The #1 reliable gear drive system

A rotor needs to rotate – every time! First introduced over two decades ago and still being continuously improved, Hunter's water lubricated gear drive system is #1 in the industry, ensuring you with reliability and time proven optimum performance. The PGP won't stop rotating when it's supposed to be turning.

Advanced Wiper Seal
The most reliable and time proven pressure activated riser seal

The PGP includes a heavy-duty wiper seal that has been designed for long life under harsh, gritty conditions. A special chemical agent is incorporated into the rubber to keep microbial action from damaging the seal. The surface area of the seal, which is in contact with the riser shaft, is large enough to stop all flow-by, but small enough to keep debris from lodging between the seal and the riser shaft. The PGP wiper seal can be easily removed for replace-

PRODUCT FEATURES AND BENEFITS *(continued)*

ment or lowered on the riser shaft for cleaning, thus keeping the benefits of a no flow-by rotor.

Heavy Duty Spring
Positive retraction in the harshest conditions

Other manufactures skimp on expensive stainless steel by using a thinner grade and fewer coils. Only the PGP rotor, with the strongest spring in its class, can assure reliable retraction time after time, keeping the sprinkler out of sight when not in use (as well as protecting them from mowers and eliminating potential injury hazards).

Drain Check Valve
Saves water, reduces liability

The PGP rotor line has an optional built-in drain check valve in the PGP and PGS, which can be factory installed. The check valve is standard on all 12" PGH (30 cm) rotors. A gray ring around the rubber cover identifies models that have the check valve option. The PGP with the check valve installed at the factory is designed to hold back water to a maximum of 10' (3 m) of elevation change. This 10' of height is accomplished by a stronger spring added to the head during manufacturing. Hunter provides the PGP rotor with a check valve because stopping low head drainage eliminates washouts and wasted water, and may also prevent accidents from occurring and pests from showing up. Also, due to water staying in the pipes, installers may benefit from the reduction of potential surge damage.

Check Valve Field Installation: The check valve feature can be added to PGP sprinklers in the field by ordering Hunter part # 142300. This field installed check valve will hold back water to a maximum of 2 ft. (.6 m).

Large Dirty Water Screen
Puts an end to clogging

If dirty water is in use, the large filter screen helps prevent clogging of the nozzle. The screen is easily serviced without removing the sprinkler body from the line.

3-Spring Reversing Mechanism
Reliability when it's needed

The three springs in the PGP's reversing mechanism create a very sharp, crisp reverse trip action generating precise control of the arc stops. Just about every adjustable rotor on the market has a 2-spring reversing mechanism, which results in a somewhat soft, non-precise reversing trip.

Integral Rubber Cover with Membrane Covered Sockets
Keeps dirt out, permanently installed

A unique flexible membrane ensures that adjustment sockets will always be covered, thus protecting the internal mechanism from dirt and intrusion. It's also simple to increase or decrease the arc settings using the adjustment socket symbols, while the handy arrow provides immediate recognition of direction of the nozzle stream.

Ratcheting Riser Stem
Setting the right side arc-stop is much simpler and easier

Always looking for ways to make the installers' job easier and more cost effective, Hunter has designed the PGP rotor family with a ratcheting riser stem. When the right side arc-stop needs adjustment, and unscrewing the rotor case or removing the entire internal assembly is not the answer, just pull-up the riser stem (either wet or dry) and turn it in the direction you require.

Shrub Staking Kit
Secure installation of shrub rotors on slopes or in shrub areas

The Hunter Shrub Staking Kit allows contractors to install the PGS and I-10 rotors quickly and easily on slopes and in shrub beds.

Nozzle Trajectory
This rotor nozzle trajectory chart is designed to help determine how close a sprinkler can be placed to an object such as a fence or hedge without obstructing the spray pattern. All information shown is at optimum operating pressures.

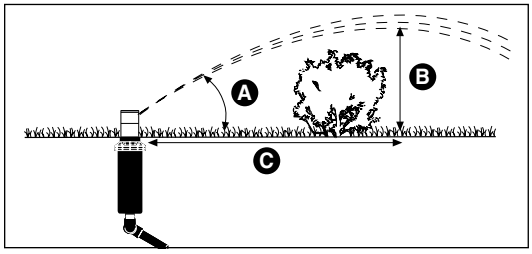

Hunter Nozzle Height and Trajectory Chart

Sprinkler Model	Nozzle No.	Pressure in PSI	Degrees of Trajectory	Max Height of Spray (ft.)	Distance from head (ft.) to Max. Height
PGP	1	50	A 25	B 7'	C 22'
	2	50	25	7'	22'
	3	50	25	8'	23'
	4	50	25	8'	23'
	5	50	25	9'	26'
	6	50	25	10'	28'
	7	50	25	11'	30'
	8	50	25	11'	30'
	9	50	25	12'	32'
	10	60	25	13'	32'
	11	60	25	13'	38'
	12	60	25	13'	40'
PGP Low Angle	4	50	13	5'	22'
	5	50	13	4'	22'
	6	50	13	4'	22'
	7	50	13	4'	22'
	8	50	13	5'	24'
	9	50	13	5'	26'
	10	60	13	6'	30'

Note:All performance data is derived from testing at 4" above finished grade.

PRODUCT COMPARISONS

Features	Hunter PGP®	Toro Super 700	Toro Super 600	Toro V-1550	Rain Bird T-Bird (T-Tree)	Rain Bird R-50	Rain Bird 5000
Standard angle nozzles	12	7	3	9	6	5	9
Low angle nozzles	7	7	0	0	6	0	3
Pull-up socket for easy servicing	✔						✔
Arc Adjustment, without removing parts	✔	✔	✔	✔			✔
Arc Adjustable from the top	✔	✔				✔	✔
Quick check arc	✔	✔	✔		✔		✔
Up, down, wet or dry arc adjustment	✔						✔
Easy to read adjustment symbols on top	✔						✔
Directional flow indicator on top of sprinkler	✔			✔		✔	✔
Nozzle identification from top of sprinkler	✔	✔	✔	✔	✔	✔	✔
Less than 1¾" exposed diameter	✔						✔
Permanent rubber cover	✔						✔
Patented, proven, reliable 3 spring reversing mech	✔						
Optional factory installed drain check valve	✔	✔		✔	✔	✔	✔
Optional reclaimed water versions	✔	✔	✔	✔	✔	✔	✔

Features	Hunter PGP®	Rain Bird Maxi-Paw	Nelson Pro 6000	Irritrol XL	Weathermatic Turbo 3	K-Rain K-2
Standard angle nozzles	12	5	8	6	9	9
Low angle nozzles	7	2	7	0	0	0
Pull-up socket for easy servicing	✔			✔	✔	✔
Arc Adjustment, without removing parts	✔	✔		✔	✔	✔
Arc Adjustable from the top	✔			✔		✔
Quick check arc	✔					✔
Up, down, wet or dry arc adjustment	✔			✔		✔
Easy to read adjustment symbols on top	✔			✔	✔	✔
Directional flow indicator on top of sprinkler	✔			✔	✔	✔
Nozzle identification from top of sprinkler	✔					
Less than 1¾" exposed diameter	✔					
Permanent rubber cover	✔			✔	✔	✔
Patented, proven, reliable 3 spring reversing mech	✔					✔
Optional factory installed drain check valve	✔	✔	✔	✔		✔
Optional reclaimed water versions	✔		✔	✔	✔	

Rain Bird® is a registered trademark of Rain Bird Sprinkler Manufacturing Corporation
Nelson® is a registered trademark of L. R. Nelson Corporation
Weathermatic® is a registered trademark of Telsco Industries
Toro® is a registered trademark of The Toro Company
Irritrol® is a registered trademark of the Irritrol® Systems
K-Rain® is a registered trademark of the K-Rain Company

NOZZLE REPLACEMENT GUIDE

PGP® Gear Driven Rotor for Spacings of 25 to 47 feet (5,1 to 14,3 meters)

To Replace		Use Hunter Nozzle
RAIN BIRD		
Mini-Paw 15103	07 (Black)	6
	09 (Green)	7
Maxi-Paw 2045	06 (Red)	5
	07 (Black)	6
	08 (Blue)	8
	10 (Yellow)	9
	12 (Beige)	10
R-50	1.5 (Black)	5
	2.0 (Brown)	7
	3.0 (Gray)	8
	4.0 (Yellow)	9
	6.0 (Green)	11
T-Bird T-30	1.3 (Black)	4
	2.5 (Gray)	6
	5.0 (Green)	9
T-Bird T-Tree	1.0	2
	1.5	3
	2.0	5
	3.0	6
	4.0	8
	6.0	9
5000	1.0	3
	1.5	4
	2.0	5
	3.0	7
	4.0	8
	6.0	10
15111	10 (5/32" nozzle)	9
21A, 27A	10 (5/32" nozzle)	9
25	10 (5/32" nozzle)	9
31A, 37A	14 (7/32" nozzle)	11
35	12 (3/16" nozzle)	10

To Replace		Use Hunter Nozzle
TORO		
300 Stream Rotor	308-XX-02	4
	308-XX-03	7
	316-XX-02	7
	316-XX-03	10
XP 300 Series	XP-300-090-07	4
	180-07	7
	360-07	10
	090-09	5
	180-09	8
	360-09	11
	090-10	5
	180-10	9
	360-10	12
320 Rain Pro	324-XX-05	4
	324-XX-06	5
	328-XX-05	7
	328-XX-06	8
	336-XX-05	10
	336-XX-06	11
Super 600	1.3	4
	2.5	7
	5.0	10
	6.0	10
Super 700	1.3	3
	1.5	4
	2.0	5
	3.0	7
	4.5	8
	6.0	9
	7.5	10
	9.0	11

To Replace		Use Hunter Nozzle
NELSON		
Mini Rotor	6702 (Green)	5
	6703 (Red)	7
	6704 (Black)	8
6760	see "Single Nozzle"	
Pro 6000	Use Hunter 4-11	
Pro 6500	61	6
	62	9
	63	10
	64	11
WEATHERMATIC		
G40P & G40FS		7
G50P		9
G50F		11
G60P & G40F		10
G60F		12
TJ2/TJ3		Use Hunter 4-12
SINGLE NOZZLE all impact mfrs.		
	7/64"	5
	1/8"	7
	9/64"	8
	5/32"	9
	11/64"	9
	3/16"	10
	13/64"	11
	7/32"	11
	15/64"	12

PRODUCT EXPLANATION

SPECIFICATION GUIDE

EXAMPLE: **PGP - ADJ - LA**

MODEL	FEATURES	OPTIONS
PGS = Shrub	**ADJ, 360, ADV, 36V, ARV, 3RV**	**XX** = 12 Standard Red Nozzles **LA** = 7 Low-Angle Nozzles **01 – 12** = Factory-Installed Standard Red Nozzle **1.5 – 8.0** = User-Installed Standard Blue Nozzle **4 – 10 LA** = Factory-Installed Low-Angle Nozzle
PGP = 4" Pop-up	**ADJ, 360, ADV, 36V, ARV, 3RV**	
PGH = 12" Pop-up	**ADV, 36V, ARV, 3RV**	
PGP-ATR = Advanced Technology Impact Replacement, Retrofits Rain Bird® Maxi-PAW and others		

KEY TO FEATURES:

ADJ = Adjustable with no Check Valve
360 = Full-Circle with no Check Valve
ADV = Adjustable with Check Valve
ATR = 2¼" Pop-up, Adjustable with no Check Valve and #7 Standard Red Nozzle Factory-Installed
36V = Full-Circle with Check Valve
ARV = Adjustable, Reclaimed Water, with Check Valve
3RV = Full-Circle, Reclaimed Water, with Check Valve

TECHNICAL INFORMATION

MODELS

PGS – Shrub
PGP – 4" Pop-up (10 cm)
PGH – 12" Pop-up (30 cm)

DIMENSIONS

- Overall height:
  PGS – 7⅜" (19 cm)
  PGP – 7⅜" (19 cm)
  PGH – 17" (43 cm)
- ¾" female inlet NPT
- Exposed diameter: 1¾" (4 cm)

OPERATING SPECIFICATIONS

- Discharge rate: .5 to 14.4 GPM (0.11 to 3.27 m^3/hr; 1.9 to 54.5 l/min)
- Radius: 22' to 52' (6.7 to 15.9 m)
- Pressure range: 30 to 70 PSI (2.1 to 4.8 bars; 206 to 482 kPa)
- Precipitation rates: approximately .4" (10 mm) per hour at 50 PSI (3.4 bars; 344 kPa) for spacings from 25' to 45' (7.6 to 13.7 m)
- Nozzle trajectory:
  standard – 25°
  low-angle – 13°

OPTIONS AVAILABLE

- Factory-installed drain check valve for up to 10' (3.0 m) elevation change
- Reclaimed water cover
- Low angle nozzles
- Factory-installed nozzles

PRODUCT PERFORMANCE

PGP Gray Low Angle Nozzle Performance Data

Nozzle	Pressure PSI	Radius ft.	Flow GPM	Precip in/hr ■	Precip in/hr ▲
4	30	22'	1.4	0.56	0.64
	40	24'	1.7	0.57	0.66
	50	**26'**	**1.8**	**0.51**	**0.59**
	60	28'	2.0	0.49	0.57
5	30	25'	1.6	0.49	0.57
	40	27'	1.9	0.50	0.58
	50	**28'**	**2.1**	**0.52**	**0.60**
	60	30'	2.3	0.49	0.57
6	30	27'	2.1	0.55	0.64
	40	30'	2.5	0.53	0.62
	50	**33'**	**2.8**	**0.49**	**0.57**
	60	35'	3.0	0.47	0.54
7	30	29'	2.8	0.64	0.74
	40	32'	3.1	0.58	0.67
	50	**35'**	**3.5**	**0.55**	**0.64**
	60	37'	3.8	0.53	0.62
8	30	31'	3.4	0.68	0.79
	40	34'	3.9	0.65	0.75
	50	**37'**	**4.4**	**0.62**	**0.71**
	60	38'	4.7	0.63	0.72
9	30	33'	4.3	0.76	0.88
	40	37'	5.0	0.70	0.81
	50	**40'**	**5.6**	**0.67**	**0.78**
	60	42'	6.1	0.67	0.77
10	40	38'	6.5	0.87	1.00
	50	40'	7.3	0.88	1.01
	60	**42'**	**8.0**	**0.87**	**1.01**
	70	44'	8.6	0.86	0.99
P	Blank nozzle plug for turning off selected sprinklers during repairs, maintenance, etc.				

PGP Blue Standard Nozzle Performance Data

Nozzle	Pressure PSI	Radius ft.	Flow GPM	Precip in/hr ■	Precip in/hr ▲
1.5	25	29'	1.2	0.27	0.32
	35	31'	1.4	0.28	0.32
	45	**31'**	**1.5**	**0.30**	**0.35**
	55	32'	1.8	0.34	0.39
	65	32'	1.9	0.36	0.41
2.0	25	33'	1.4	0.25	0.29
	35	33'	1.7	0.30	0.35
	45	**34'**	**2.0**	**0.33**	**0.38**
	55	34'	2.1	0.35	0.40
	65	32'	2.3	0.43	0.50
2.5	25	33'	1.7	0.30	0.35
	35	35'	2.1	0.33	0.38
	45	**35'**	**2.5**	**0.39**	**0.45**
	55	35'	2.6	0.41	0.47
	65	35'	2.9	0.46	0.53
3.0	25	35'	2.2	0.35	0.40
	35	36'	2.7	0.40	0.46
	45	**38'**	**3.0**	**0.40**	**0.46**
	55	39'	3.4	0.43	0.50
	65	39'	3.7	0.47	0.54
4.0	25	37'	3.0	0.42	0.49
	35	39'	3.5	0.44	0.51
	45	**40'**	**4.0**	**0.48**	**0.56**
	55	41'	4.5	0.52	0.60
	65	41'	4.8	0.55	0.63
5.0	25	37'	3.7	0.52	0.60
	35	39'	4.5	0.57	0.66
	45	**42'**	**5.0**	**0.55**	**0.63**
	55	42'	5.7	0.62	0.72
	65	42'	6.2	0.68	0.78
6.0	25	38'	4.3	0.57	0.66
	35	40'	5.6	0.67	0.78
	45	**43'**	**6.0**	**0.62**	**0.72**
	55	44'	6.7	0.67	0.77
	65	44'	7.3	0.73	0.84
8.0	25	37'	6.0	0.84	0.97
	35	41'	7.0	0.80	0.93
	45	**44'**	**8.0**	**0.80**	**0.92**
	55	46'	9.0	0.82	0.95
	65	46'	9.8	0.89	1.03

PGP Red Standard Nozzle Performance Data

Nozzle	Pressure PSI	Radius ft.	Flow GPM	Precip in/hr ■	Precip in/hr ▲
1	30	28'	0.5	0.12	0.14
	40	29'	0.6	0.14	0.16
	50	**29'**	**0.7**	**0.16**	**0.19**
	60	30'	0.8	0.17	0.20
2	30	29'	0.7	0.16	0.19
	40	30'	0.8	0.17	0.20
	50	**30'**	**0.9**	**0.19**	**0.22**
	60	31'	1.0	0.20	0.23
3	30	30'	0.9	0.19	0.22
	40	31'	1.0	0.20	0.23
	50	**31'**	**1.2**	**0.24**	**0.28**
	60	32'	1.3	0.24	0.28
4	30	32'	1.2	0.23	0.26
	40	33'	1.4	0.25	0.29
	50	**34'**	**1.6**	**0.27**	**0.31**
	60	34'	1.8	0.30	0.35
5	30	34'	1.6	0.27	0.31
	40	36'	1.8	0.27	0.31
	50	**38'**	**2.0**	**0.27**	**0.31**
	60	38'	2.2	0.29	0.34
6	30	34'	2.0	0.33	0.38
	40	36'	2.4	0.36	0.41
	50	**38'**	**2.7**	**0.36**	**0.42**
	60	38'	2.9	0.39	0.45
7	30	34'	2.6	0.43	0.50
	40	38'	3.0	0.40	0.46
	50	**40'**	**3.4**	**0.41**	**0.47**
	60	40'	3.7	0.45	0.51
8	30	37'	3.2	0.45	0.52
	40	39'	3.7	0.47	0.54
	50	**41'**	**3.9**	**0.45**	**0.52**
	60	42'	4.6	0.50	0.58
9	30	38'	3.6	0.48	0.55
	40	41'	4.3	0.49	0.57
	50	**44'**	**5.2**	**0.52**	**0.60**
	60	45'	5.5	0.52	0.60
10	40	44'	6.0	0.60	0.69
	50	46'	6.8	0.62	0.71
	60	**47'**	**7.6**	**0.66**	**0.76**
	70	49'	8.2	0.66	0.76
11	40	46'	8.0	0.73	0.84
	50	48'	8.9	0.74	0.86
	60	**50'**	**9.8**	**0.75**	**0.87**
	70	51'	10.5	0.78	0.90
12	40	46'	10.5	0.96	1.10
	50	48'	11.9	0.99	1.15
	60	**50'**	**12.7**	**0.98**	**1.13**
	70	52'	14.1	1.00	1.16

PRODUCT PERFORMANCE

PGP Gray Low Angle Nozzle
Performance Data – Metric

Nozzle	Pressure Bars	Pressure kPa	Radius m	Flow m³/hr	Flow l/min	Precip mm/hr ■	Precip mm/hr ▲
4	1.7	172	6.4	0.30	4.9	14	17
	2.0	200	6.7	0.32	5.3	14	16
	2.5	248	7.0	0.35	5.9	14	17
	3.0	303	7.3	0.39	6.5	15	17
	3.5	**352**	**7.9**	**0.42**	**7.0**	**13**	**15**
	4.0	400	8.5	0.45	7.5	12	14
	4.5	448	8.5	0.47	7.9	13	15
5	1.7	172	7.3	0.33	5.6	12	14
	2.0	200	7.6	0.36	6.0	12	14
	2.5	248	7.9	0.40	6.7	13	15
	3.0	303	8.2	0.45	7.4	13	15
	3.5	**352**	**8.5**	**0.48**	**8.0**	**13**	**15**
	4.0	400	8.8	0.52	8.6	13	15
	4.5	448	9.1	0.55	9.1	13	15
6	1.7	172	8.8	0.44	7.3	11	13
	2.0	200	9.1	0.47	7.9	11	13
	2.5	248	9.4	0.53	8.8	12	14
	3.0	303	9.8	0.59	9.8	12	14
	3.5	**352**	**10.1**	**0.64**	**10.6**	**13**	**15**
	4.0	400	10.7	0.68	11.3	12	14
	4.5	448	10.7	0.72	12.0	13	15
7	1.7	172	8.5	0.58	9.7	16	18
	2.0	200	8.8	0.62	10.3	16	18
	2.5	248	9.4	0.68	11.4	15	18
	3.0	303	10.1	0.75	12.5	15	17
	3.5	**352**	**10.7**	**0.80**	**13.3**	**14**	**16**
	4.0	400	11.3	0.85	14.1	13	15
	4.5	448	11.3	0.89	14.8	14	16
8	1.7	172	9.1	0.71	11.8	17	20
	2.0	200	9.4	0.76	12.7	17	20
	2.5	248	9.8	0.84	14.1	18	20
	3.0	303	10.4	0.93	15.5	17	20
	3.5	**352**	**11.3**	**1.00**	**16.6**	**16**	**18**
	4.0	400	11.6	1.06	17.6	16	18
	4.5	448	11.6	1.12	18.6	17	19
9	1.7	172	9.8	0.89	14.9	19	22
	2.0	200	10.1	0.96	16.0	19	22
	2.5	248	10.7	1.07	17.9	19	22
	3.0	303	11.3	1.19	19.8	19	22
	3.5	**352**	**12.2**	**1.28**	**21.3**	**17**	**20**
	4.0	400	12.8	1.37	22.8	17	19
	4.5	448	12.8	1.45	24.1	18	20
10	1.7	172	10.1	1.17	19.5	23	27
	2.0	200	10.7	1.26	21.0	22	26
	2.5	248	11.3	1.40	23.4	22	25
	3.0	303	11.6	1.55	25.9	23	27
	3.5	352	12.2	1.67	27.8	22	26
	4.0	**400**	**12.8**	**1.78**	**29.7**	**22**	**25**
	4.5	448	12.8	1.89	31.4	23	27
P	Blank nozzle plug for turning off selected sprinklers during repairs, maintenance, etc.						

PGP Blue Standard Nozzle
Performance Data – Metric

Nozzle	Pressure Bars	Pressure kPa	Radius m	Flow m³/hr	Flow l/min	Precip mm/hr ■	Precip mm/hr ▲
1.5	1.7	172	8.8	0.27	4.5	7	8
	2.0	200	9.1	0.29	4.8	7	8
	2.5	248	9.4	0.32	5.4	7	8
	3.0	303	9.8	0.35	5.9	7	9
	3.5	**352**	**9.8**	**0.38**	**6.4**	**8**	**9**
	4.0	400	9.8	0.41	6.8	9	10
	4.5	448	9.4	0.43	7.2	10	11
2.0	1.7	172	10.1	0.32	5.4	6	7
	2.0	200	10.1	0.35	5.8	7	8
	2.5	248	10.1	0.39	6.5	8	9
	3.0	303	10.4	0.43	7.2	8	9
	3.5	**352**	**10.4**	**0.47**	**7.8**	**9**	**10**
	4.0	400	10.4	0.50	8.3	9	11
	4.5	448	10.4	0.53	8.8	10	11
2.5	1.7	172	10.1	0.39	6.6	8	9
	2.0	200	10.4	0.43	7.1	8	9
	2.5	248	10.7	0.48	8.0	8	10
	3.0	303	10.7	0.54	8.9	9	11
	3.5	**352**	**10.7**	**0.58**	**9.7**	**10**	**12**
	4.0	400	10.7	0.62	10.4	11	13
	4.5	448	10.7	0.66	11.1	12	13
3.0	1.7	172	10.7	0.50	8.4	9	10
	2.0	200	10.7	0.54	9.1	10	11
	2.5	248	11.0	0.61	10.2	10	12
	3.0	303	11.6	0.68	11.4	10	12
	3.5	**352**	**11.9**	**0.74**	**12.3**	**10**	**12**
	4.0	400	11.9	0.79	13.2	11	13
	4.5	448	11.9	0.84	14.0	12	14
4.0	1.7	172	11.3	0.68	11.3	11	12
	2.0	200	11.6	0.73	12.2	11	13
	2.5	248	11.9	0.81	13.6	12	13
	3.0	303	12.2	0.90	15.0	12	14
	3.5	**352**	**12.2**	**0.97**	**16.2**	**13**	**15**
	4.0	400	12.5	1.04	17.3	13	15
	4.5	448	12.5	1.10	18.3	14	16
5.0	1.7	172	11.3	0.84	14.0	13	15
	2.0	200	11.6	0.91	15.2	14	16
	2.5	248	11.9	1.02	17.1	15	17
	3.0	303	12.8	1.14	19.0	14	16
	3.5	**352**	**12.8**	**1.24**	**20.6**	**15**	**17**
	4.0	400	12.8	1.32	22.1	16	19
	4.5	448	12.8	1.41	23.4	17	20
6.0	1.7	172	11.6	1.01	16.8	15	17
	2.0	200	11.9	1.09	18.2	15	18
	2.5	248	12.2	1.22	20.4	16	19
	3.0	303	13.1	1.36	22.7	16	18
	3.5	**352**	**13.1**	**1.47**	**24.5**	**17**	**20**
	4.0	400	13.4	1.57	26.2	18	20
	4.5	448	13.4	1.67	27.9	19	21
8.0	1.7	172	11.3	1.35	22.5	21	25
	2.0	200	11.9	1.46	24.3	21	24
	2.5	248	12.5	1.63	27.2	21	24
	3.0	303	13.4	1.81	30.2	20	23
	3.5	**352**	**13.7**	**1.95**	**32.6**	**21**	**24**
	4.0	400	14.0	2.09	34.8	21	25
	4.5	448	14.0	2.22	36.9	23	26

PGP Red Standard Nozzle
Performance Data – Metric

Nozzle	Pressure Bars	Pressure kPa	Radius m	Flow m³/hr	Flow l/min	Precip mm/hr ■	Precip mm/hr ▲
1	1.7	172	8.2	0.10	1.7	3	3
	2.0	200	8.5	0.11	1.8	3	3
	2.5	248	8.5	0.13	2.1	4	4
	3.0	303	8.8	0.15	2.4	4	4
	3.5	**352**	**8.8**	**0.16**	**2.7**	**4**	**5**
	4.0	400	9.1	0.18	2.9	4	5
	4.5	448	9.1	0.19	3.2	5	5
2	1.7	172	8.5	0.14	2.4	4	5
	2.0	200	8.8	0.16	2.6	4	5
	2.5	248	8.8	0.17	2.9	4	5
	3.0	303	9.1	0.19	3.2	5	5
	3.5	**352**	**9.1**	**0.21**	**3.5**	**5**	**6**
	4.0	400	9.4	0.22	3.7	5	6
	4.5	448	9.4	0.23	3.9	5	6
3	1.7	172	8.8	0.18	3.0	5	5
	2.0	200	9.1	0.20	3.3	5	5
	2.5	248	9.1	0.22	3.7	5	6
	3.0	303	9.4	0.25	4.1	6	6
	3.5	**352**	**9.4**	**0.27**	**4.5**	**6**	**7**
	4.0	400	9.8	0.29	4.8	6	7
	4.5	448	9.8	0.31	5.1	6	7
4	1.7	172	9.4	0.24	4.1	5	6
	2.0	200	9.8	0.27	4.4	6	6
	2.5	248	9.8	0.30	5.0	6	7
	3.0	303	10.1	0.34	5.6	7	8
	3.5	**352**	**10.1**	**0.37**	**6.2**	**7**	**8**
	4.0	400	10.4	0.40	6.6	7	9
	4.5	448	10.4	0.43	7.1	8	9
5	1.7	172	10.1	0.33	5.5	7	8
	2.0	200	10.4	0.36	5.9	7	8
	2.5	248	10.4	0.39	6.5	7	8
	3.0	303	11.0	0.43	7.2	7	8
	3.5	**352**	**11.6**	**0.46**	**7.7**	**7**	**8**
	4.0	400	11.6	0.49	8.1	7	8
	4.5	448	11.6	0.51	8.6	8	9
6	1.7	172	10.1	0.42	6.9	8	10
	2.0	200	10.4	0.45	7.5	8	10
	2.5	248	10.7	0.51	8.5	9	10
	3.0	303	11.0	0.57	9.4	9	11
	3.5	**352**	**11.6**	**0.61**	**10.2**	**9**	**11**
	4.0	400	11.6	0.66	10.9	10	11
	4.5	448	11.9	0.70	11.6	10	11
7	1.7	172	10.1	0.54	9.0	11	12
	2.0	200	10.4	0.58	9.7	11	12
	2.5	248	11.0	0.65	10.8	11	12
	3.0	303	11.6	0.72	12.0	11	12
	3.5	**352**	**12.2**	**0.78**	**12.9**	**10**	**12**
	4.0	400	12.2	0.83	13.8	11	13
	4.5	448	12.2	0.88	14.6	12	14
8	1.7	172	11.0	0.66	11.0	11	13
	2.0	200	11.3	0.71	11.8	11	13
	2.5	248	11.6	0.79	13.2	12	14
	3.0	303	11.9	0.87	14.5	12	14
	3.5	**352**	**12.5**	**0.94**	**15.6**	**12**	**14**
	4.0	400	12.5	1.00	16.6	13	15
	4.5	448	12.8	1.05	17.6	13	15
9	1.7	172	11.3	0.73	12.2	11	13
	2.0	200	11.6	0.80	13.4	12	14
	2.5	248	11.6	0.92	15.4	14	16
	3.0	303	12.5	1.05	17.5	13	16
	3.5	**352**	**13.4**	**1.15**	**19.2**	**13**	**15**
	4.0	400	13.4	1.25	20.9	14	16
	4.5	448	13.7	1.35	22.4	14	17
10	2.0	200	12.2	1.14	19.0	15	18
	2.5	248	12.8	1.29	21.4	16	18
	3.0	303	13.4	1.44	24.0	16	18
	3.5	352	14.0	1.56	26.1	16	18
	4.0	**400**	**14.3**	**1.68**	**28.0**	**16**	**19**
	4.5	448	14.3	1.79	29.9	17	20
	5.0	496	14.6	1.90	31.7	18	21
11	2.0	200	12.8	1.55	25.9	19	22
	2.5	248	13.7	1.73	28.7	18	21
	3.0	303	14.0	1.90	31.7	19	22
	3.5	352	14.6	2.05	34.1	19	22
	4.0	**400**	**14.9**	**2.18**	**36.3**	**20**	**23**
	4.5	448	15.2	2.30	38.4	20	23
	5.0	496	15.5	2.42	40.4	20	23
12	2.0	200	12.8	2.03	33.8	25	29
	2.5	248	13.4	2.26	37.7	25	29
	3.0	303	14.3	2.51	41.8	24	28
	3.5	352	14.6	2.70	45.0	25	29
	4.0	**400**	**14.9**	**2.88**	**48.1**	**26**	**30**
	4.5	448	15.2	3.06	50.9	26	30
	5.0	496	15.8	3.22	53.7	26	30

Note: All precipitation rates calculated for 180 degree operation. For the precipitation rate for a 360 degree sprinkler, divide by 2.

Data represent test results in zero wind. Adjust for local conditions. Radius may be reduced up to 25% with adjustment screw (this may alter the uniformity of the spray pattern). Optimum performance is shown in bold. For information on testing standards and precipitation rate calculations, see Hunter Irrigation Products catalog.

To measure pressure at the nozzle of a PGS, PGP, PGH or any rotor sprinkler, order Hunter rotor pressure gauge kit part # 122900.

INSTALLATION DETAILS

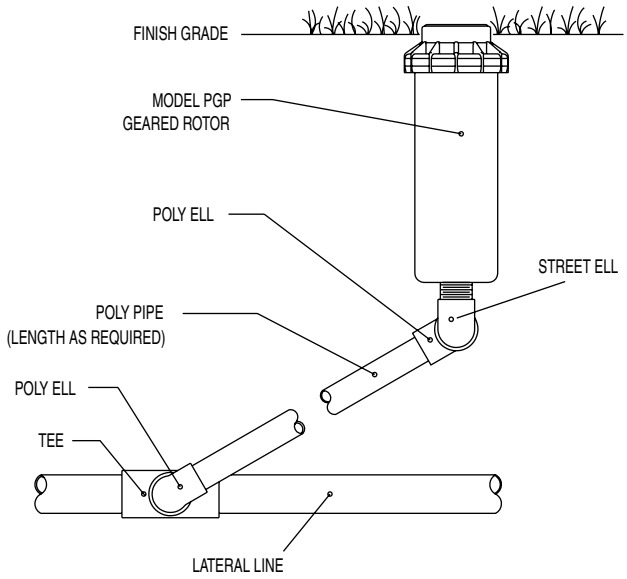

Hunter® PGP®

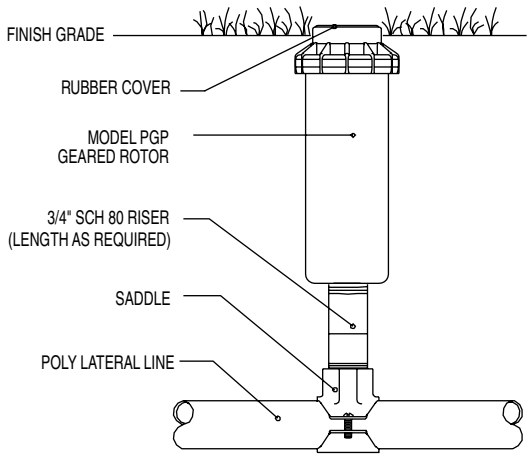

Hunter® PGP®

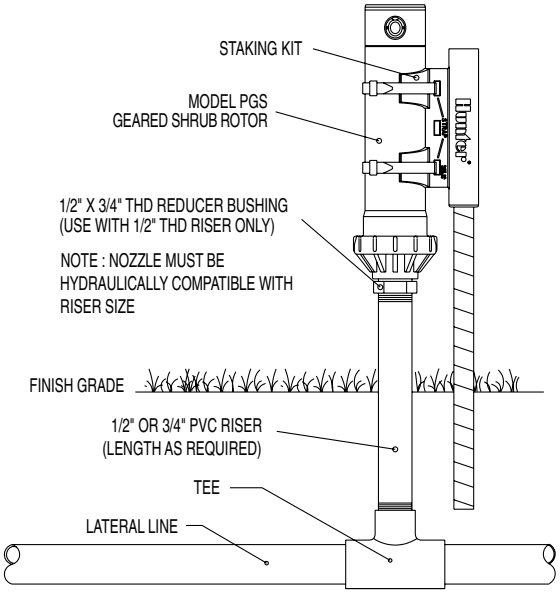

Hunter® PGS-ADV (or I-10 Shrub)

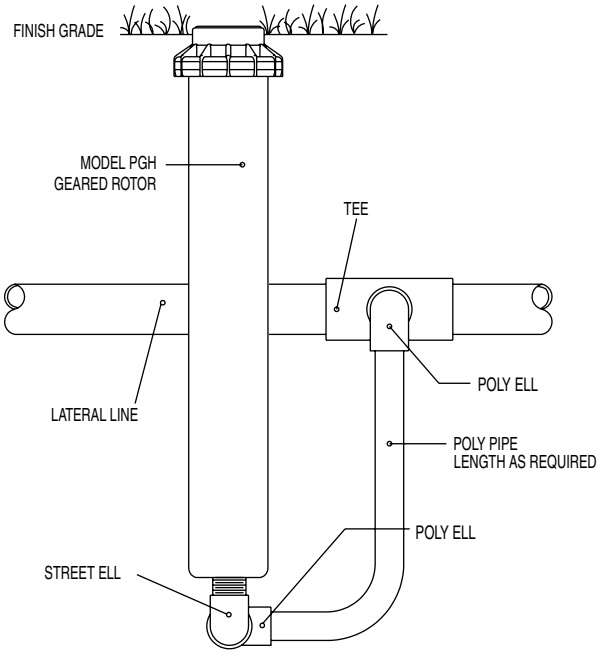

Hunter® PGH

INSTALLATION AND MAINTENANCE

PGP Installation:
The PGP® pop-up sprinkler should be installed at finished grade as shown in the illustration (Fig. 1).

Arc Adjustments:
Adjustable heads are preset to approximately 180˚. Sprinklers may be adjusted with water on or off. It is recommended that initial adjustments be made before installation.

1. Using the palm of your hand, rotate the nozzle turret counterclockwise to the left stop to complete any interrupted rotation cycle (Fig. 2).
2. Rotate the nozzle turret clockwise to the right stop. This is the fixed side of the arc. The nozzle turret must be held in this position for arc adjustments.

   The right stop does not change.

To Increase the Arc:

1. Insert the plastic key end of the Hunter wrench into the adjustment socket (Fig. 3 & 4).

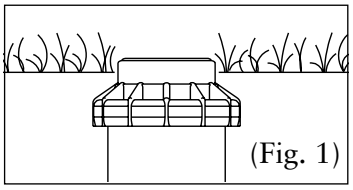
(Fig. 1)

2. While holding the nozzle turret at the right stop, turn the wrench clockwise. Each full 360˚ turn of the wrench will increase the arc 90˚.
3. Adjust to any arc between 40˚ and 360˚ (Fig. 5).
4. The wrench will stop turning, or there will be a ratcheting noise, when the maximum arc of 360˚ (full circle) has been reached.

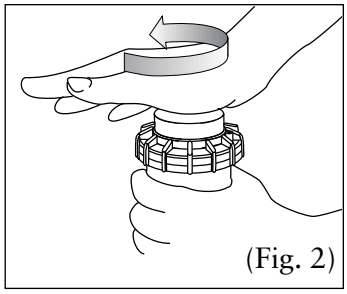
(Fig. 2)

To Decrease the Arc:

1. Insert the plastic key end of the Hunter wrench into the adjustment socket (Fig. 3 & 4).
2. While holding the nozzle turret at the right stop, turn the wrench counterclockwise. Each full 360˚ turn of the wrench will decrease the arc 90˚.

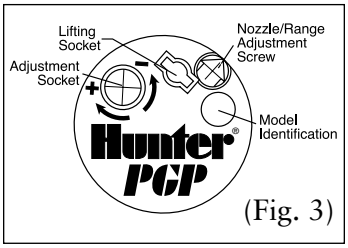

(Fig. 3)

3. Adjust to any arc between 40˚ and 360˚ (Fig. 5).
4. The wrench will stop turning, or there will be a ratcheting noise, when the minimum arc of 40˚ has been reached.

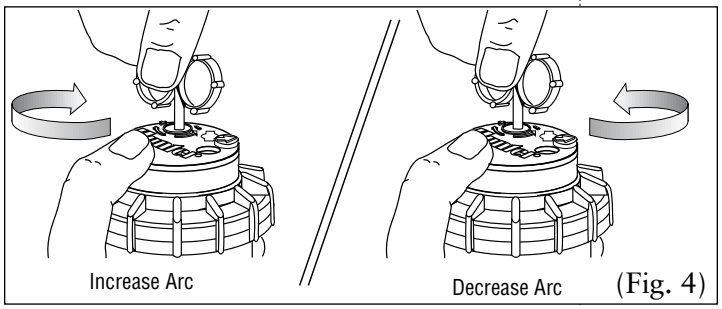

(Fig. 4)

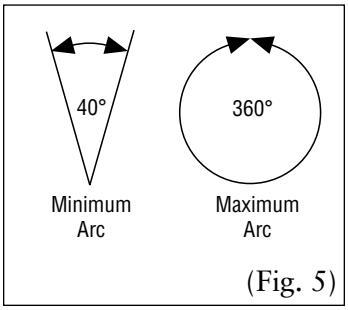

(Fig. 5)

INSTALLATION AND MAINTENANCE *(continued)*

Radius/Distance of Throw

Insert the steel hex end of the Hunter wrench into the radius adjustment screw (Fig. 6). Turn the screw clockwise (into the stream of water) to decrease the radius, or counter-clockwise to increase the radius. Radius can be reduced up to 25%.

Caution: *Turning the adjustment screw clockwise more than five full turns may result in a lost radius adjustment screw.*

Precipitation Rate Adjustment

If you have excessively wet or dry areas, you can change the nozzle in the sprinkler to increase or decrease the precipitation rate. For dry areas, install a larger nozzle. For wet areas, install a smaller nozzle.

Nozzle Installation

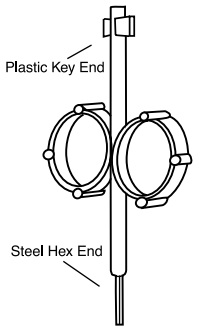

1. Insert the plastic key end of the Hunter wrench into the lifting socket of the sprinkler and turn 90°. Pull the riser up to gain access to the nozzle socket (Fig. 8).
2. Using the hex key of the Hunter wrench, turn the radius adjustment screw (Fig. 6) counterclockwise to be sure it is not blocking the nozzle socket opening. If a nozzle is already installed, it can be removed by backing out the adjustment screw and turning on the water, or by pulling outward on the nozzle "ears" with a pair of needle-nosed pliers.
3. Slip the desired nozzle into the nozzle socket (Fig. 7). Note that the socket is angled up 25°. The "ears" should be adjusted so that the nozzle range screw threads directly down between them. Then tighten the nozzle range screw. The raised bump with an arrow on the rubber cover will always indicate the location of the nozzle and direction of water flow when the sprinkler is retracted.

Aligning the Right (fixed) Side of Arc

If the right side of the arc is not properly aligned, the results may be a wet walkway or a dry turf area. The right side arc can easily be realigned. One way to realign the right stop is to turn the whole sprinkler body assembly and the fitting below it, left or right to the desired position. This may require temporary removal of the soil around the sprinkler to allow you to grip the sprinkler housing.

Another way to reset the right arc is to unscrew the body cap counter-clockwise and remove the internal assembly from the body. Once removed, rotate the nozzle turret to the right stop, screw the internal assembly back into the body with the nozzle aligned to the right side of the area you want irrigated (Fig. 9). At this point you have realigned the right arc stop, and you can adjust the left arc to an appropriate setting.

Note: *It is not necessary to dig up and remove the whole sprinkler to realign the right arc.*

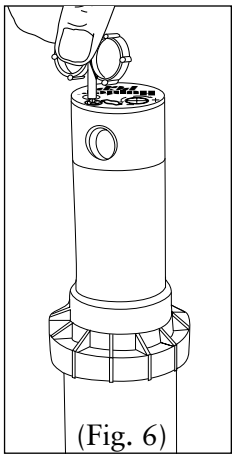
(Fig. 6)

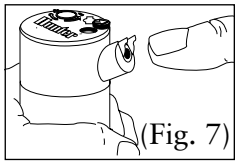
(Fig. 7)

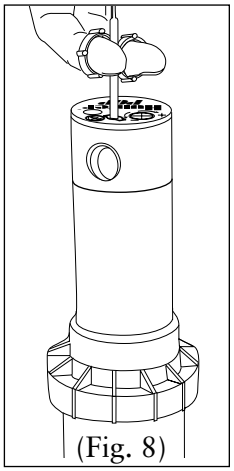
(Fig. 8)

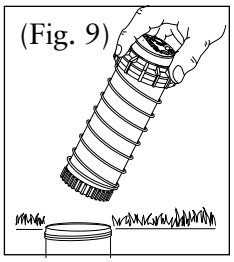
(Fig. 9)

Shrub Staking Kit

Secure installation of shrub rotors on slopes and shrub areas.

The Hunter Shrub Staking Kit allows contractors to install PGS & I-10 with ease and security to assure complete sprinkler stability and vandal resistance. The kit is used with a 5⁄16" (8 mm) rebar stake and is then attached to the sprinkler. The staking kit comes with one plastic tie strap that is 14" (36 cm) long and additional straps can be purchased if needed. One strap is the preferred method, but the staking kit will accept up to three straps. If the installer prefers using a gear clamp instead of the plastic strap, the slots on the staking kit are wide enough to accept the clamp.

The Shrub Staking Kit reduces the potential for injury by providing a protective covering over the top of the rebar stake.

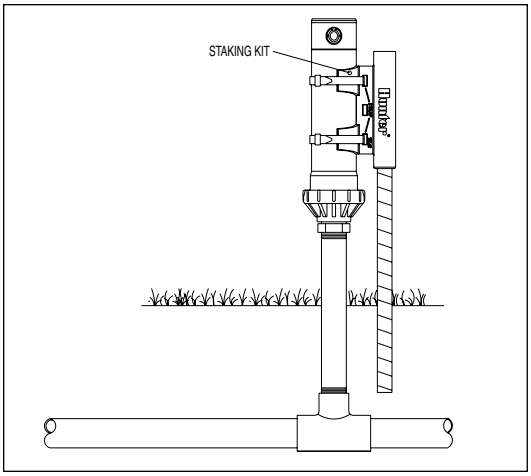

Easy to use:

1. Install the sprinkler on a riser.
2. Drive a 5⁄16" (8 mm) rebar stake into the ground, being careful not to hit the sprinkler piping system.
3. Insert the staking kit onto the rebar stake and up against the sprinkler.
4. Insert the plastic strap through the staking kit and around the sprinkler.
5. Pull the end of the strap so it is tight around the sprinkler.
6. Clip off any excess strap that is remaining.

Easy to order:

Hunter part #46-3551

PGS REPLACEMENT PARTS

Item	Description		Catalog No.
	Standard Nozzle Set (12) 25˚ Trajectory		130900
	Low Angle Nozzle Set (7) 13˚ Trajectory		233200
	Set Screw		120300
	Protective Rubber Cover *(Fits Units Manufactured After 2/93)*		
		Black (ADJ)	269400
		Black (360)	295800
		Purple (ADJ)	297900
		Purple (360)	298000
	Riser Assembly	ADJ	133005
		360	138105
		ADV, ARV	133015
		36V, 3RV	138115
	Standard Filter Screen *(Black)*		102600
	Standard Shrub Head Base		106900
Options			
	Check Valve Spring		235000
	Filter Screen/Check Valve Sub Assembly		142300
	(Standard on ADV, ARV, 36V and 3RV – Black)		
	Check Valve Seal		101400
	Retainer Clip		204900
	Shrub Head Base for Check Valve Use		234900

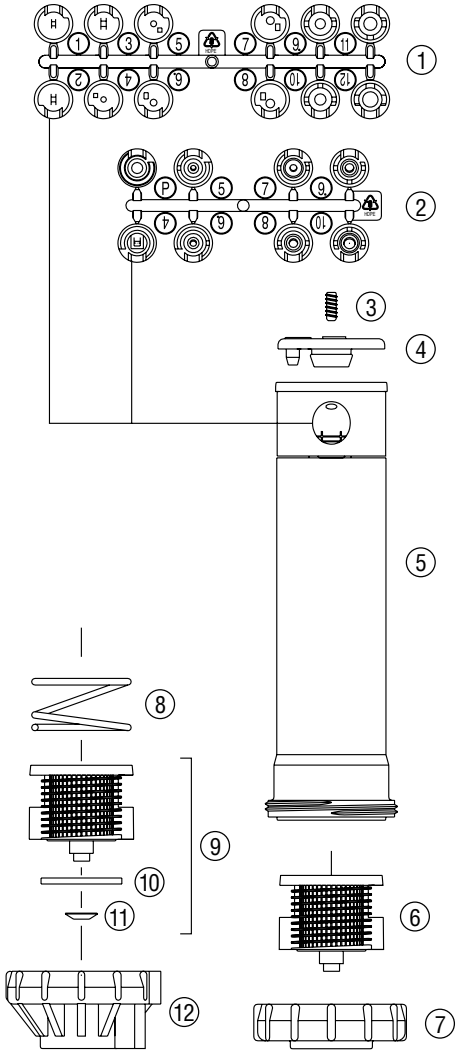

PGP REPLACEMENT PARTS

Item	Description		Catalog No.
	Standard Nozzle Set (12) 25˚ Trajectory		130900
	Low Angle Nozzle set (7) 13˚ Trajectory		233200
	Set Screw		120300
	Protective Rubber Cover *(Fits Units Manufactured After 2/93)*		
		Black (ADJ)	269400
		Black (360)	295800
		Purple (ADJ)	297900
		Purple (360)	298000
	Riser Assembly	ADJ	131105
		360	137605
		ADV, ARV	131115
		36V, 3RV	137615
	Standard Filter Screen *(Black)*		102600
	Body Cap		103700
	Riser Seal		181500
	Spring Seat		189900
	Retraction Spring	ADJ, 360	104000
		ADV, ARV, 36V, 3RV	150600
	Pop-Up Body		100200
	Filter Screen/Check Valve Sub-Assembly *(Black, Standard on ADV, ARV, 36V, 3RV)*		142300
	Check Valve Seal		101400
	Retainer Clip		204900
	Seal Replacement Kit *(Includes Parts 8 & 9)*		253400

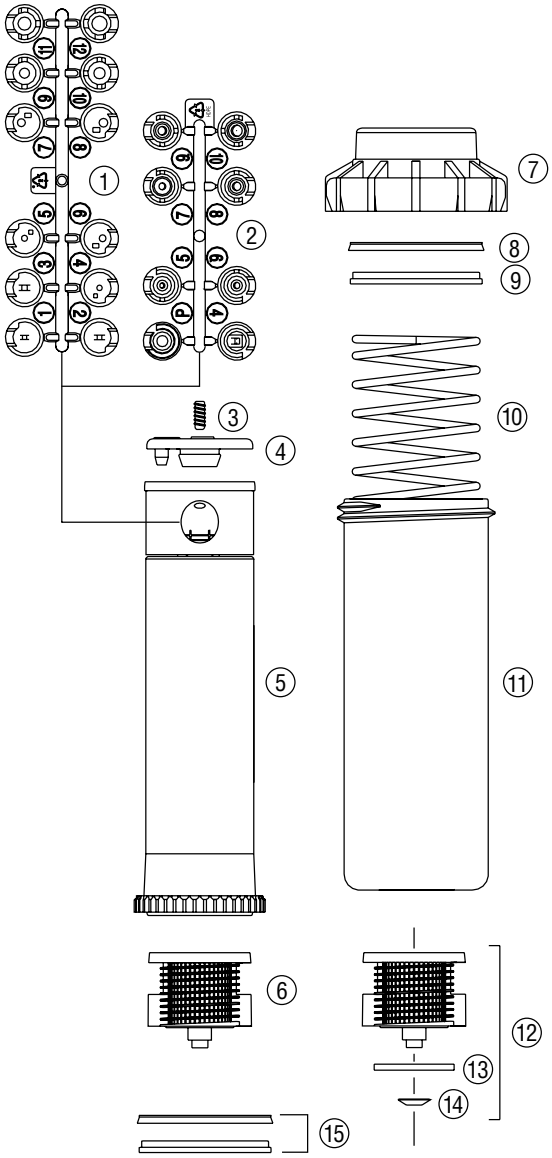

PGH REPLACEMENT PARTS

Item	Description		Catalog No.
	Standard Nozzle Set (12) 25˚ Trajectory		130900
	Low Angle Nozzle set (7) 13˚ Trajectory		233200
	Set Screw		120300
	Protective Rubber Cover *(Fits Units Manufactured After 2/93)*		
		Black (ADV)	269400
		Black (36V)	295800
		Purple (ARV)	297900
		Purple (3RV)	298000
	Riser Assembly	ADV, ARV	297805
		36V, 3RV	298805
	Body Cap		103700
	Slip Washer		296100
	Riser Seal		181500
	Spring Seat		189900
	Retraction Spring		179500
	Body		179100
	Filter Screen/Check Valve Assembly *(Black)*		142300
	Check Valve Seal		101400
	Retainer Clip		204900

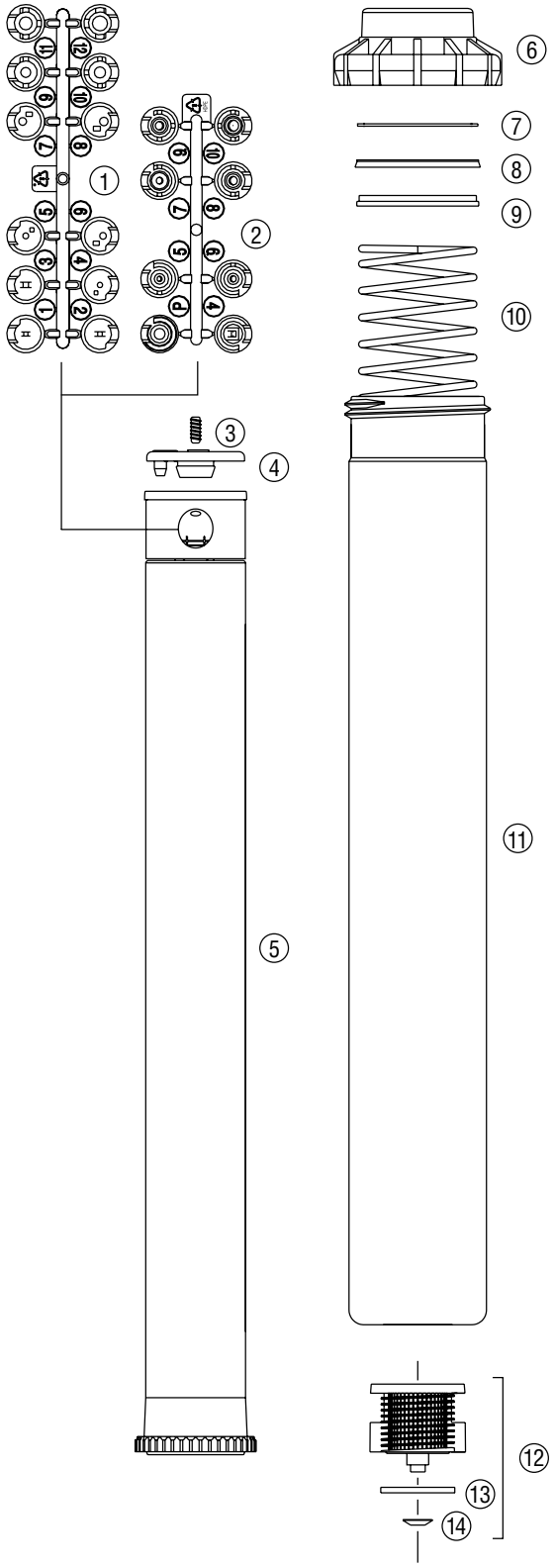

PRECIPITATION RATE

Two formulas are shown below, the first is most useful when comparing precipitation rates between different types of sprinklers or calculating precipitation rates on areas with a single type of sprinkler and uniform head and row spacing. The second method is better suited to areas where sprinkler head flows or spacing varies. Metric versions are shown in parenthesis.

Precipitation Rate - Method #1 - Individual Head Method

$$Pr = \frac{34650 \text{ x GPM (for any arc)}}{\text{Degrees Arc x Head Spacing x Row Spacing}}$$

$$Pr = \frac{m^3\text{/hr (for any arc) x 360,000}}{\text{Degrees of arc x Head spacing (m) x Row Spacing (m)}}$$

$$Pr = \frac{\text{l/min (for any arc) x 21,600}}{\text{Degrees of arc x Head spacing (m) x Row Spacing (m)}} = \text{mm/hr}$$

Where:

Pr	=	precipitation rate in inches per hour
GPM	=	flow for a given sprinkler of any arc, in gallons per minute
Degrees Arc	=	the arc of the given sprinkler in degrees
Head Spacing	=	the space between the heads in a row, in feet
Row Spacing	=	the space between rows of heads, in feet
34650	=	constant for conversion of area and flow into common units

Example: What is the precipitation rate for a 270 degree sprinkler with 6.8 GPM spaced at 28' by 30'?

$$Pr = \frac{34{,}650 \text{ x } 6.8}{270 \text{ x } 28 \text{ x } 30} \qquad Pr = 1.04 \text{ in./hr.}$$

Precipitation Rate - Method #2 - Total Area Method

$$Pr = \frac{96.25 \text{ x Total GPM}}{\text{Total Area}} \qquad \left(Pr = \frac{\text{Total } m^3\text{/hr x 1,000}}{\text{Total Area } (m^2)} = \text{mm/hr}\right) \qquad \left(Pr = \frac{\text{Total l/min x 60}}{\text{Total Area } (m^2)} = \text{mm/hr}\right)$$

Where:

Pr	=	precipitation rate in inches per hour
Total GPM	=	total flow from all sprinklers in the given area in gallons per minute
Total Area	=	the given irrigated area in square feet
96.25	=	constant for conversion of area and flow into common units

Example: What is the average precipitation rate for a section of turf 325' by 80' if the total flow from all sprinklers in the area is 112 gpm.

$$Pr = \frac{96.25 \text{ x } 112}{(325 \text{ x } 80)} \qquad Pr = 0.41 \text{ in./hr.}$$

SPRINKLER RUN TIME

The sprinkler run time formula calculates the number of minutes required to apply enough water to replace the water lost by evapotranspiration for a specific crop irrigated with a system at a particular precipitation rate and efficiency.

$$T = \frac{60 \text{ x } Et_o \text{ x } K_c}{Pr \text{ x } E_a}$$

Where:

T	=	sprinkler run time in minutes
Et_o	=	reference evapotranspiration rate, in inches
K_c	=	crop coefficient, percent
Pr	=	precipitation rate of the area, in inches per hour
E_a	=	application efficiency of the system, percent
60	=	Constant for conversion of area, flow, inches per hour and inches per day into common units

Example: Determine the sprinkler run time for an athletic field with an accumulated Et_o of 0.45 inches (0.15"/day for 3 days) and a crop coefficient for the warm season turf of 0.70. The sprinkler precipitation rate is 0.50 in./hr. with an application efficiency of 75%.

$$T = \frac{60 \text{ x } 0.45 \text{ x } 0.70}{0.50 \text{ x } 0.75} \qquad T = 50.4 \text{ min.}$$

Hunter Industries Incorporated • The Irrigation Innovators
1940 Diamond Street • San Marcos, California 92078 • TEL: (1) 760-744-5240 • FAX: (1) 760-744-7461
www.HunterIndustries.com

© 2007 Hunter Industries Incorporated

LIT-213 5/07